

LumiPlus Flexi ON/OFF projector



LumiPlus Flexi on/off lamps are monocolor white lamps, available in white and warm white, and powered at 12 V AC or 24 V DC.

Keep it simple, just switch them on to light your pool.

LumiPlus Flexi projectors are underwater floodlights made up of two components: a **lamp** and a **decorative ring**. Flexi projectors can be installed into a niche, a surface mounted or a nozzle.

MADE UP OF TWO COMPONENTS:

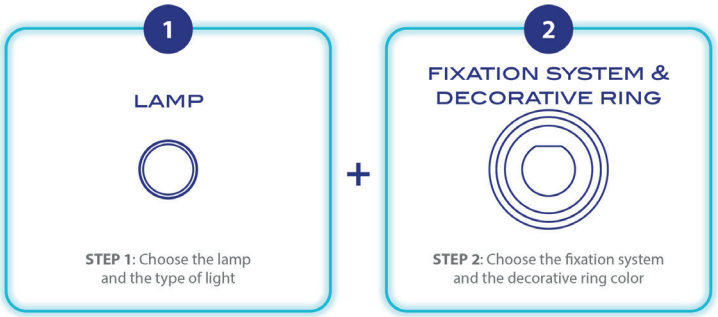

TECNICAL SPECIFICATIONS

VOLTAGE:	12 V AC or 24 V DC (according to the model)
FREQUENCY:	50/60 Hz
SERVICE LIFE:	L70-50,000 h
MAX. WATER TEMPERATURE:	40 ºC
MAX. INSTALLATION DEPTH:	2 m
MAXIMUM WATER TREATMENT VALUES:	
	Chlorine: 2 mg/l Bromine: 5 mg/l
	Salt chlorinator (NaCl): 6 g/l
	Pool water pH: 7.2 and 7.6
CABLE:	2.5 m. H07RN-F 2 x 1 mm^2
Cables from 5 to 30 meters long are available (see codes).	
MATERIALS:	Polyamide



©2023 Fluidra. All rights reserved. All trademarks and trade names used herein are the property of their respective owners.

ASTRALPOOL

1 LAMP



DIMENSIONS

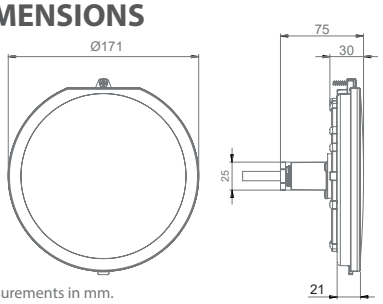

*measurements in mm.

	76573	76573WW	71201	71201WW	71202	71202WW	71236
TYPE OF LIGHT	WHITE	WARM WHITE	WHITE	WARM WHITE	WHITE	WARM WHITE	BLANCA
VOLTAGE	12V AC	12V AC	24V DC	24V DC	24V DC	24V DC	24V DC
POWER	28 W	28 W	14 W	14 W	32 W	32 W	8,7 W
CONSUMPTION	40 VA	40 VA	14 VA	14 VA	32 VA	32 VA	8,7 VA
LUMINOUS FLUX	2750 lm	2750 lm	1485 lm	1485 lm	4300 lm	4300 lm	1485 lm
COLOR TEMP.	5.700K	3.000K	5.700K	3.000K	5.700K	3.000K	5.700K
CRI >	70	80	70	80	70	80	70
FLUX ANGLE	100º	100º	100º	100º	100º	100º	100º
THERMAL PROTECTION	Self-regulation		Flasher	Flasher	Flasher	Flasher	Flasher
ENERGY CLASS Según UE 2019/2015	F	F	F	F	D	D	B
INSTALLATIONN IN SALT WATER	Yes	Yes	Yes	Yes	Yes	Yes	Yes
COMPATIBLE CONTROL SYSTEMS	ON/OFF	ON/OFF	ON/OFF	ON/OFF	ON/OFF	ON/OFF	ON/OFF

2 FIXATION SYSTEM & DECORATIVE RING

DECORATIVE RING FOR NICHE



DECORATIVE RING FOR SURFACE



DECORATIVE RING FOR NOZZLE



White	Beige	Light gray	Anthracite gray	Stainless steel * AISI 316	How to install
71209	71209CL090	71209CL129	71209CL144	71209CLSS	
71210	71210CL090	71210CL129	71210CL144	-	
71211	71211CL090	71211CL129	71211CL144	-	

©2023 Fluidra. All rights reserved. All trademarks and trade names used herein are the property of their respective owners.

DIMENSIONS OF FIXATION SYSTEM & DECORATIVE RING

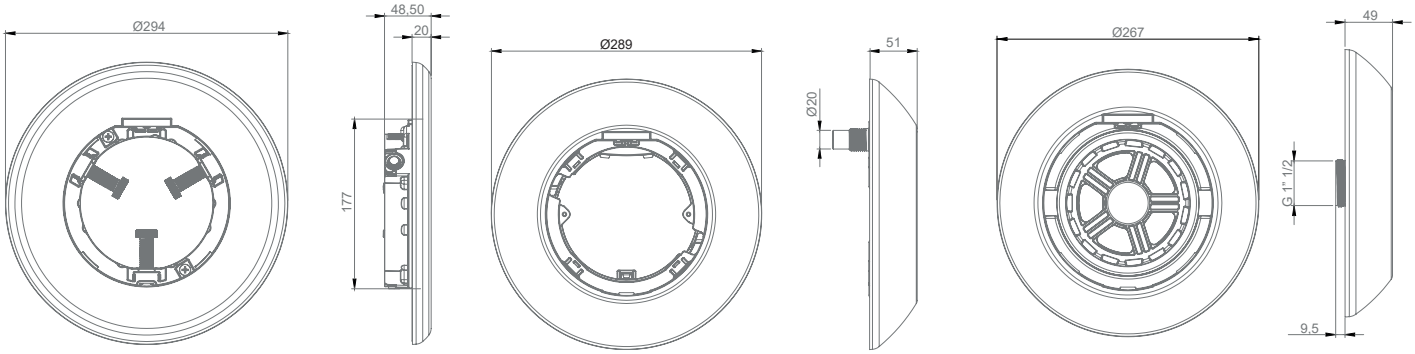

*measurements in mm.

FLEXINICHE (71209) : fits in any niche with an internal diameter between 180 and 230 mm.

FLEXISLIM (71210) : can be surface-mounted on new pools or clipped to the existing AstralPool's surface fittingss.

FLEXIRAPID (71211) : compatible with any 1½" internal thread nozzle.

1+2 KITS FLEXINICHE - FLEXISLIM - FLEXIRAPID



	76576 76577, 76578	76576WW 76577WW, 76578WW	71213 71215, 71217
TYPE OF LIGHT	WHITE	WARM WHITE	WHITE
VOLTAGE	12V AC	12V AC	24V DC
POWER	28 W	28 W	14 W
CONSUMPTION	40 VA	40 VA	14 VA
LUMINOUS FLUX	2750 lm	2750 lm	1485 lm
COLOR TEMP.	5.700K	3.000K	5.700K
CRI >	70	80	70
FLUX ANGLE	100º	100º	100º
THERMAL PROTECTION	Self-regulation	Self-regulation	Flasher
ENERGY CLASS Según UE 2019/2015	A G F	A G F	A G F
INSTALLATIONN IN SALT WATER	Si	Si	Si
COMPATIBLE CONTROL SYSTEMS	ON/OFF	ON/OFF	ON/OFF

PHOTOMETRY

WHITE / WARM WHITE

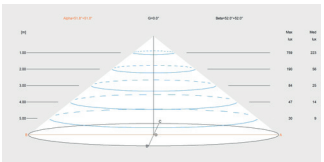

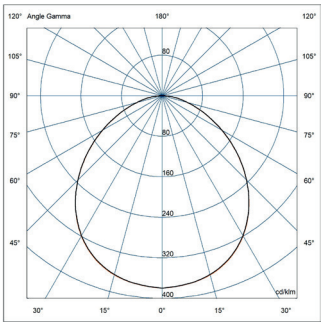

©2023 Fluidra. All rights reserved. All trademarks and trade names used herein are the property of their respective owners.

INSTALLATION FITTINGS

SWIMMING POOL TYPE	FLEXINICHE FACEPLATE	FLEXISLIM FACEPLATE	FLEXIRAPID* FACEPLATE
CONCRETE	00349, 5410, 59813	✓	35418
CONCRETE + LINER	17805, 54103, 59814 59815, 72261	59983	06544, 17382, 59983
PANELS	23670, 23671	✓	00332, 27084
POLYESTER	00364, 28887, 54103 59814, 59815, 72261	✓	74179

* Compatible with any 1½" internal thread nozzle.

PACKAGING AND PALLETIZATION

SINGLE BOX

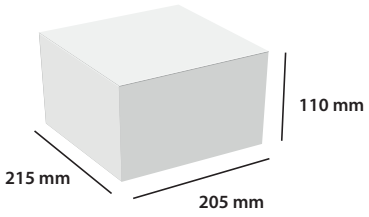

FIXATION SYSTEM & DECORATIVE RING

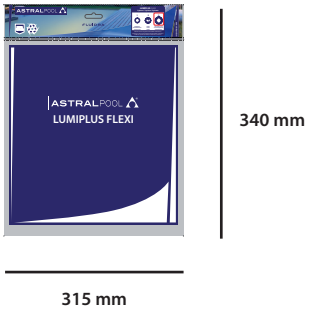

STANDARD BOX

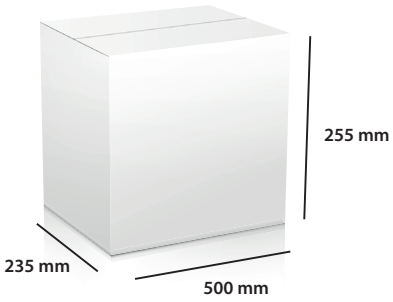

Code	76573, 76573WW,	71201, 71201WW, 71202, 71202WW, 71236	76576, 76576WW 76577, 76577WW 76578, 76578WW 71213, 71215, 71217
Single box size (mm)	215 x 205 x 110	225 x 245 x 110	340 x 115x 315
Volume / Single box (m^3)	0,005	0,006	0,012
Weight / Single box (Kg)	0,73	0,89	1,33
Units / Standard box	4	4	5
Volume / Standard box (m^3)	0,03		0,06
Peso / Standard box (Kg)	3,42	4,11	7,15
Units / Pallet	224		150
Volume / Pallet (m^3)	2,16		2,52
Weight / Pallet (Kg)	206,52	245,16	234,50

©2023 Fluidra. All rights reserved. All trademarks and trade names used herein are the property of their respective owners.