Elongated Fittings

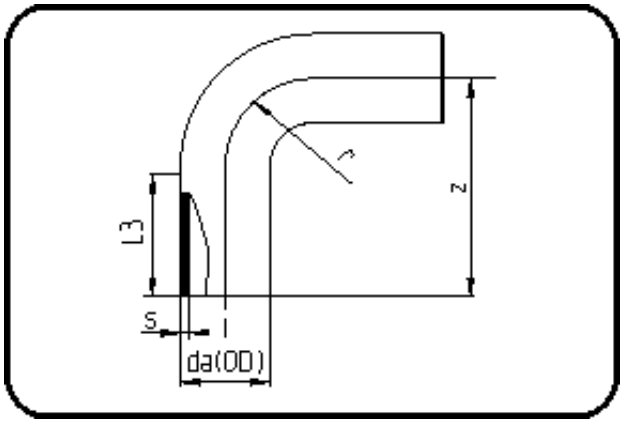

Code: 068

- **MULTI-Bend 90°**
- long spigot
- W/P-TW
- injection moulded
- **Butt + E-fusion-welding**
- **PE 100-RC black**

Dimension	Code	Detail	Weight
75	70.068.0075.11	75X6,8 SDR11 PN16	0.41

	Unit	Nominale	Tol+	Tol-
da(OD)	mm	75.00	0.50	0.00
L3	mm	75.00	3.00	3.00
r	mm	75.00	-	-
s	mm	6.80	0.80	0.00
z	mm	150.00	4.50	4.50