Elongated Fittings

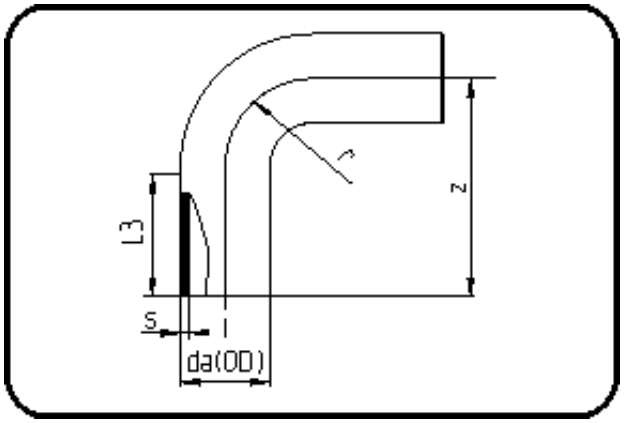

Code: 068

- **MULTI-Bend 90°**
- long spigot
- W/P-TW
- injection moulded
- **Butt + E-fusion-welding**
- **PE 100-RC black**

Dimension	Code	Detail	Weight
125	70.068.0125.17	125X7,4 SDR17 PN10	1.19

	Unit	Nominale	Tol+	Tol-
da(OD)	mm	125.00	0.80	0.00
L3	mm	92.00	4.50	4.50
r	mm	125.00	-	-
s	mm	7.40	0.90	0.00
z	mm	218.00	6.00	6.00