MODEL	COLOUR	Capacity	Code	H	øD	ØC	Precharge pressure ± 20%	Max operating pressure	System Temperature	Membrane Temperature
		litres		mm	mm		bar	bar		
HY	WHITE	5	11A0000523	270	160	3/4" NPT	3,0	10	-10÷+99°C	-10÷+70°C
HY	WHITE	8	11A0000836	280	200	3/4" NPT	3,0	10	-10÷+99°C	-10÷+70°C
HY	WHITE	12	11A0001246	264	270	3/4" NPT	3,0	10	-10÷+99°C	-10÷+70°C
HY	WHITE	18	11A0001835	349	270	3/4" NPT	3,0	10	-10÷+99°C	-10÷+70°C
HY	WHITE	24	11A0002439	392	300	1" G	3,0	10	-10÷+99°C	-10÷+70°C

Max operating pressure: SEE TABLE
System temperature SEE TABLE
Membrane temperature: SEE TABLE
Factory precharge: SEE TABLE
Nominal volume: SEE TABLE
Colour: SEE TABLE

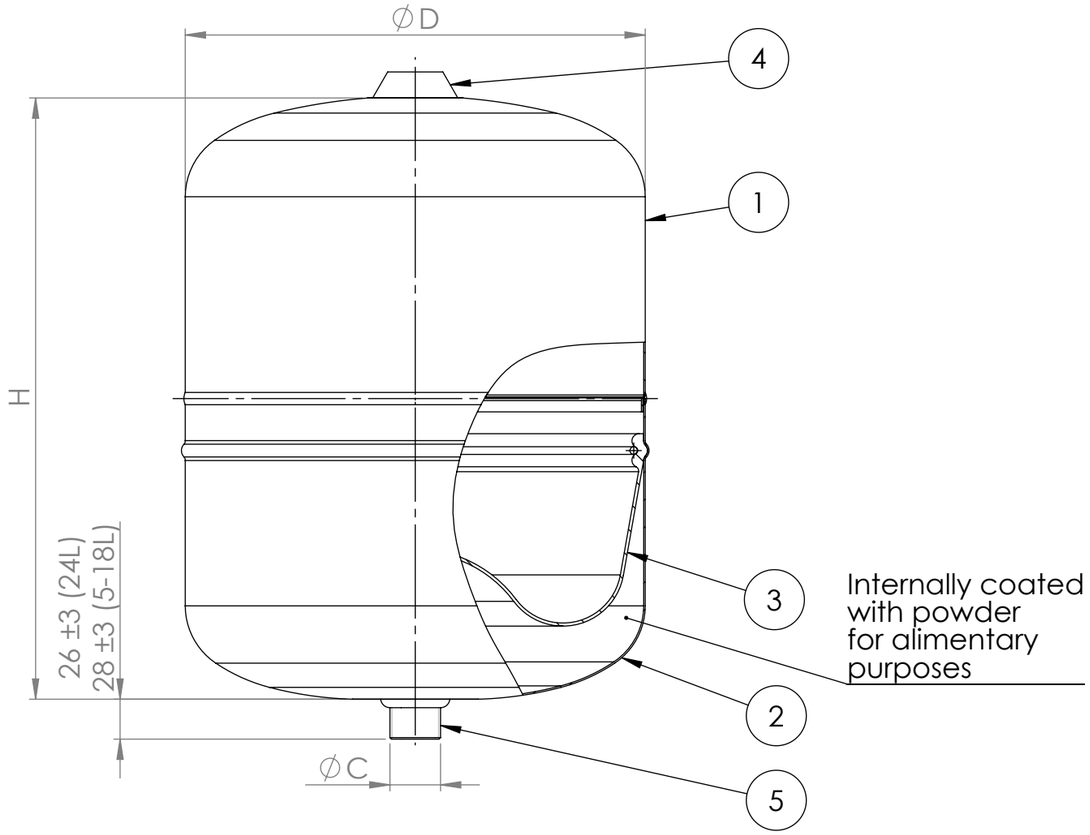

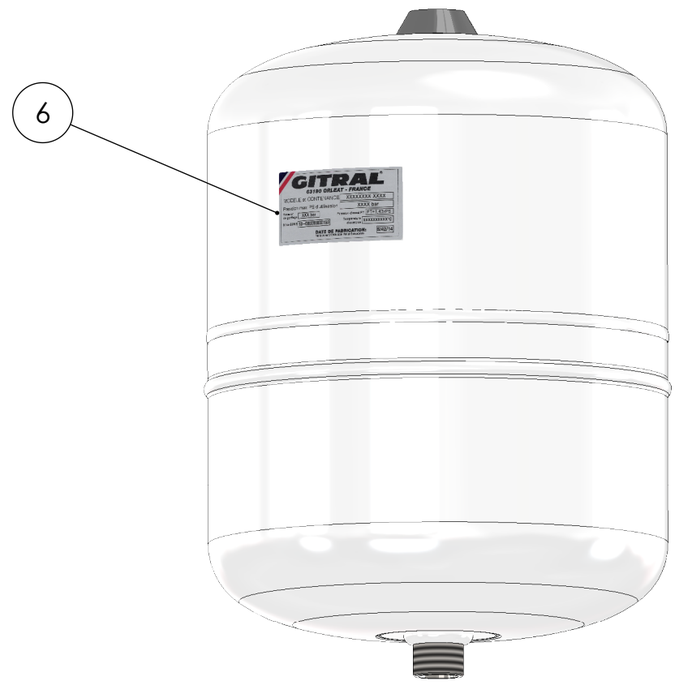

Pos.	Denomination	Q.ty	Material
1	UPPER HEAD	1	CARBON STEEL
2	DOWNER HEAD	1	CARBON STEEL
3	MEMBRANE	1	SYNTHETIC RUBBER
4	PRECHARGE VALVE	1	-
5	THREADED NOZZLE	1	STAINLESS STEEL
6	SELF-ADHESIVE LABEL	1	-
7	-	-	-
8	-	-	-
9	-	-	-

Revisioni		
Rev.	Descrizione	Data
01	3D VIEW	25/08/2016

GITRAL®
ZI DE BOURNAT F63190 ORLEAT

DRAWING N° HY
SCALE 1:4
MATERIAL SEE TABLE
Dimensions in mm

*:Tolerance variation bigger/lower than 20% do not compromise the expansion vessel functioning

DRAWN	DATE 25/08/2016	SIGNATURE
CHECKED	DATE 25/08/2016	SIGNATURE
APPROVED CHERVIN	DATE 25/08/2016	SIGNATURE

DENOMINATION
TYPE HY HYDROCHAUD VESSEL 5-24L TR INOX

CODE
SEE TABLE

This drawing is the property of company GITRAL S. A. All rights reserved.

A3

All dimension tolerances not indicated are ± 2% for lenght and ± 3mm for diameter