Forum 3600

Design:



A36110CR21

Forum 3600 Soap holder A36110CR21

INDA ACCESSORIES Forum 3600 Soap holder Cm11X13.6 H5.6 CR

To Activate the interactive 3D view, you must trust this document (see hint on the top) in Adobe Acrobat and click on the question mark.

3D VIEW

Moves you toward or away from objects inthe scene when you drag vertically. You canalso zoom with the hand tool by holding downShift as you drag.

Moves the model vertically and horizontallyonly. You can also pan with the hand tool:Ctrl-drag.

Turns 3D objects around relative to thescreen. How the objects move depends onthe starting view, where you start draggingand the direction in which you drag.

info@inda.net
www.inda.net
+39 0363 38061

INDA SpA
Registered Office
Operational Headquaters
Via dell'Industria, 41
I-24040 Pagazzano (BG)

2D DERIVATION

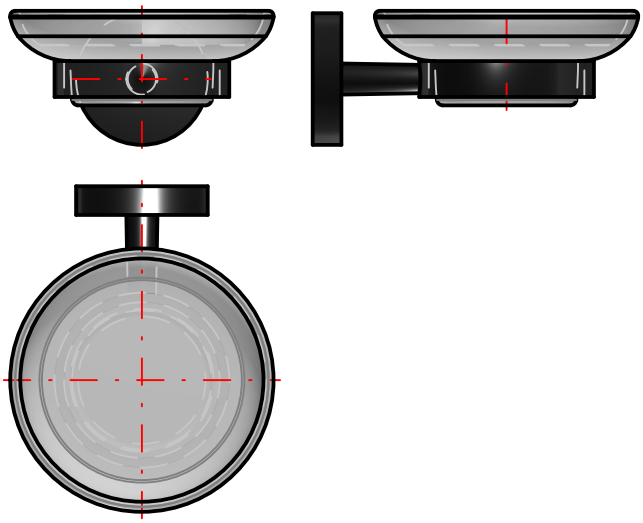

TECHNICAL DRAWINGS

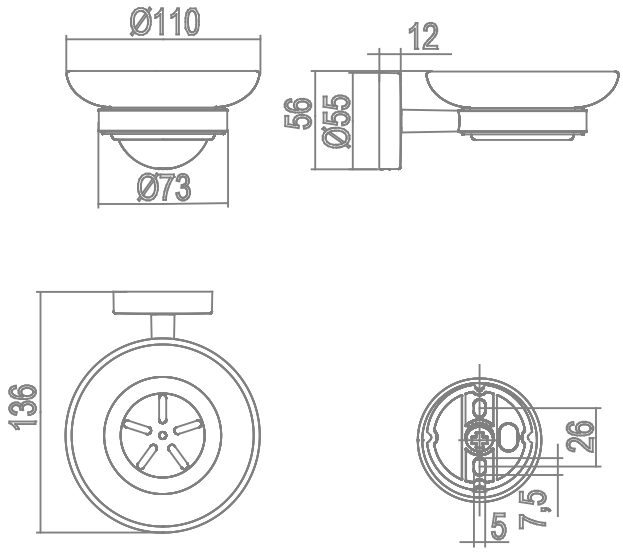

AVAILABLE FINISHES



Code	A36110CR21
Material	Chrome-plated
Material	Satined glass
Very short description 1	INDA Soap holder Cm11X13.6 H5.6
Very short description 2	Forum 3600 A36110CR21 11X13.6 CR
Article description	INDA ACCESSORIES Forum 3600 Soap holder Cm11X13.6 H5.6 CR
International code	EAN-13:8010359665401
Height [cm]	5.6
Width [cm]	11
Depth [cm]	13.6
Weight [kg]	0.390
Series	Forum 3600
LINE	Soap holder
Model	A36110CR21
Intrastat code	79070000
Panel finishes	Satined glass
URL link web site of the article	https://www.inda.net/

info@inda.net
www.inda.net
+39 0363 38061

INDA SpA
Registered Office
Operational Headquaters
Via dell'Industria, 41
I-24040 Pagazzano (BG)