Forum 3600

Design:



A36250CR

Forum 3600 Paper holder A36250CR

INDA ACCESSORIES Forum 3600 Paper holder Cm18.9X9.7 H6.4 CR

To Activate the interactive 3D view, you must trust this document (see hint on the top) in Adobe Acrobat and click on the question mark.

3D VIEW

Moves you toward or away from objects inthe scene when you drag vertically. You canalso zoom with the hand tool by holding downShift as you drag.

Moves the model vertically and horizontallyonly. You can also pan with the hand tool:Ctrl-drag.

Turns 3D objects around relative to thescreen. How the objects move depends onthe starting view, where you start draggingand the direction in which you drag.

info@inda.net
www.inda.net
+39 0363 38061

INDA SpA
Registered Office
Operational Headquaters
Via dell'Industria, 41
I-24040 Pagazzano (BG)

2D DERIVATION

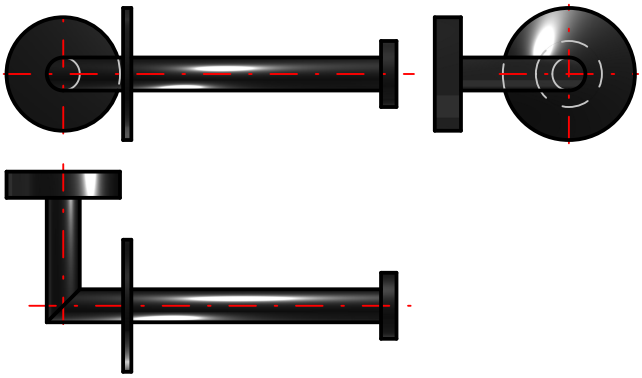

TECHNICAL DRAWINGS

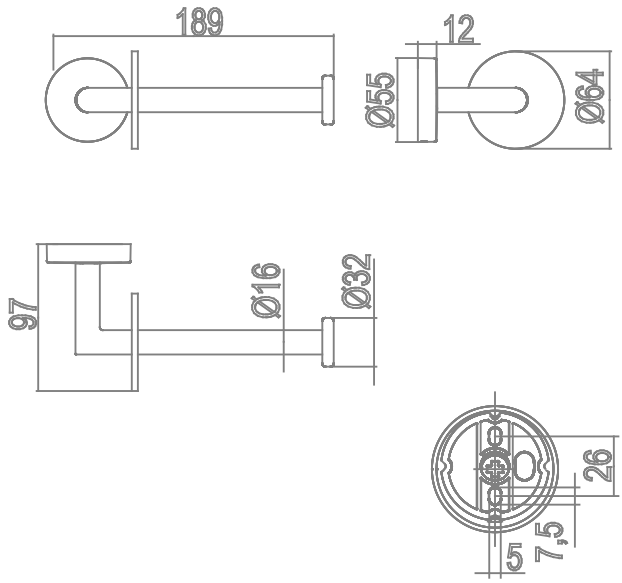

AVAILABLE FINISHES

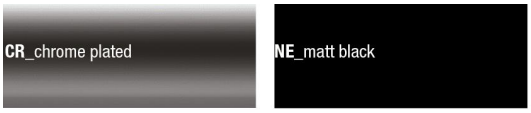

Code	A36250CR
Material	Chrome-plated
Very short description 1	INDA Paper holder Cm18.9X9.7 H6.4
Very short description 2	Forum 3600 A36250CR 18.9X9.7 CR
Article description	INDA ACCESSORIES Forum 3600 Paper holder Cm18.9X9.7 H6.4 CR
International code	EAN-13:8010359665500
Height [cm]	6.4
Width [cm]	18.9
Depth [cm]	9.7
Weight [kg]	0.355
Series	Forum 3600
LINE	Paper holder
Model	A36250CR
Intrastat code	79070000
URL link web site of the article	https://www.inda.net/

info@inda.net
www.inda.net
+39 0363 38061

INDA SpA
Registered Office
Operational Headquaters
Via dell'Industria, 41
I-24040 Pagazzano (BG)