Elongated Fittings

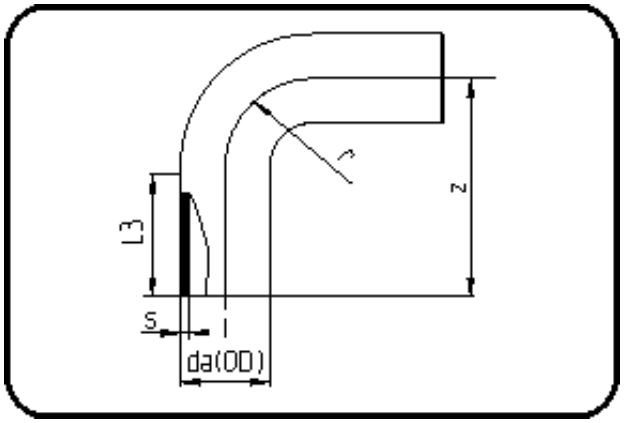

Code: 068

- **MULTI-Bend 90°**
- long spigot
- W/P-TW
- injection moulded
- **Butt + E-fusion-welding**
- **PE 100-RC black**

Dimension	Code	Detail	Weight
250	70.068.0250.17	250X14,8 SDR17 PN10	7.38

	Unit	Nominale	Tol+	Tol-
da(OD)	mm	250.00	1.50	0.00
L3	mm	133.00	6.00	6.00
r	mm	250.00	-	-
s	mm	14.80	1.60	0.00
z	mm	389.00	7.50	7.50