Elongated Fittings

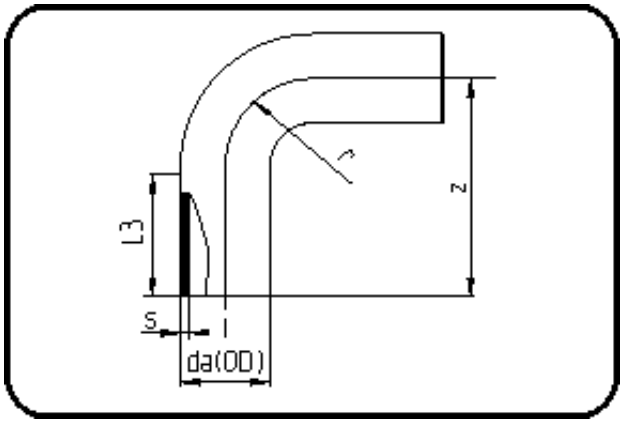

Code: 068

- **MULTI-Bend 90°**
- long spigot
- W/P-TW
- injection moulded
- **Butt-welding**
- **PE 100-RC black**

Dimension	Code	Detail	Weight
20	70.068.0020.11	20X2,0 SDR11 PN16	0.01

	Unit	Nominale	Tol+	Tol-
da(OD)	mm	20.00	0.30	0.00
L3	mm	40.00	3.00	3.00
r	mm	20.00	-	-
s	mm	2.00	0.30	0.00
z	mm	60.00	4.50	4.50