# Fittings

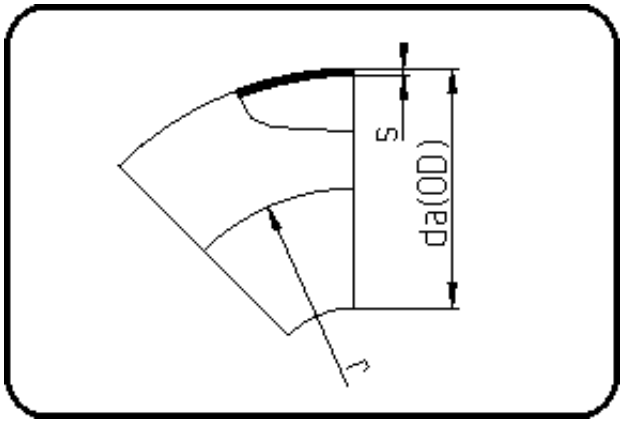


Code: 001.2

- **Bend 45°**

- injection moulded
- **Butt-welding**
- **AGRU-Vent PVDF**

| Dimension | Code | Detail | Weight |
|---|---|---|---|
| 160 | 34.001.2160.00 | 160X3,0 | 0.50 |

| | Unit | Nominale | Tol+ | Tol- |
|---|---|---|---|---|
| da(OD) | mm | 160.00 | - | - |
| r | mm | 157.00 | - | - |
| s | mm | 3.00 | 0.60 | 0.00 |