Elongated Fittings

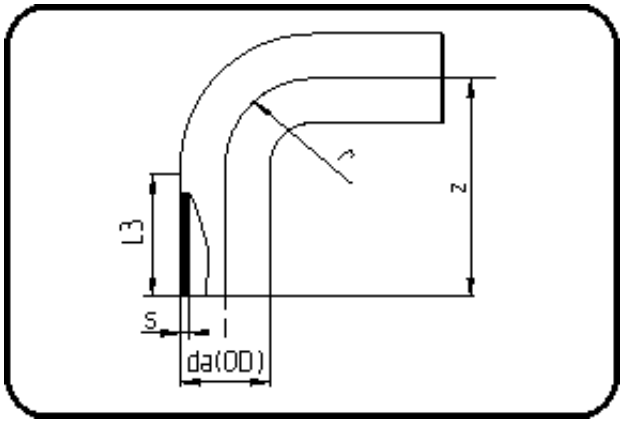

Code: 068

- **MULTI-Bend 90°**
- long spigot
- W/P-TW
- injection moulded
- **Butt + E-fusion-welding**
- **PE 100-RC black**

Dimension	Code	Detail	Weight
110	70.068.0110.17	110X6,6 SDR17 PN10	0.77

	Unit	Nominale	Tol+	Tol-
da(OD)	mm	110.00	0.70	0.00
L3	mm	82.00	3.00	3.00
r	mm	110.00	-	-
s	mm	6.60	0.80	0.00
z	mm	189.00	6.00	6.00