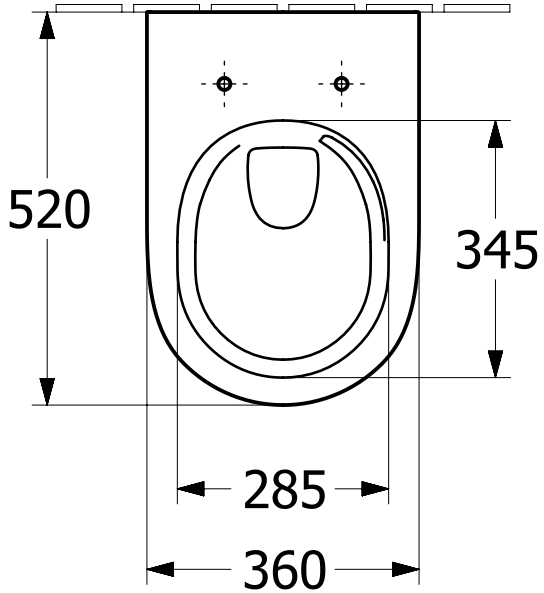

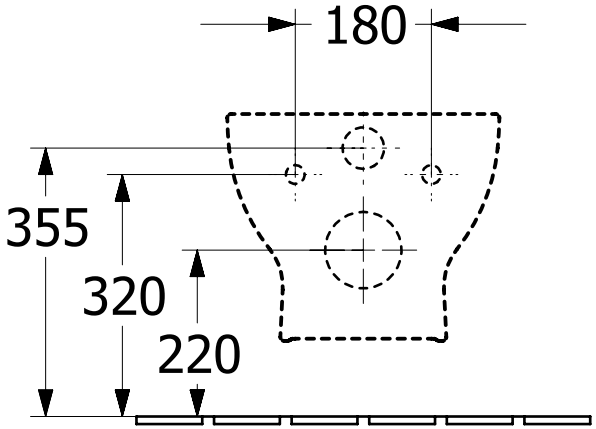

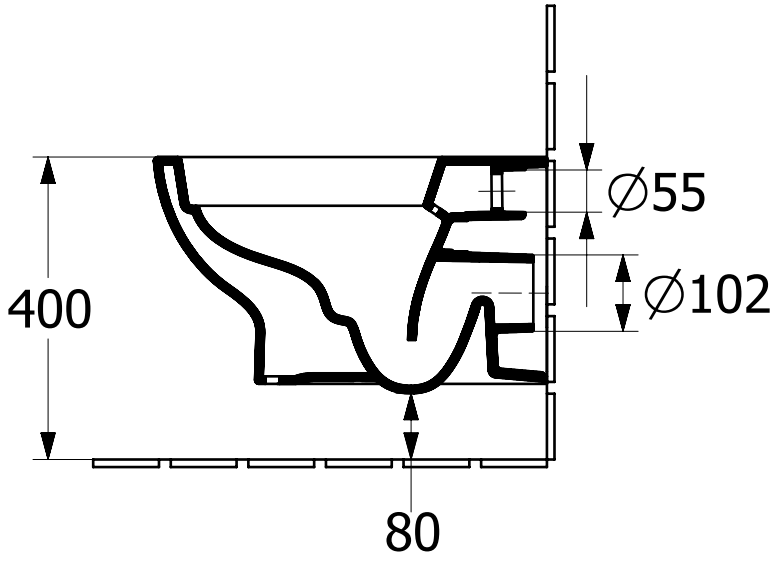

O Novo 5C39C0 5C39CL	Villeroy & Boch 1748
V02 / 11.11.2025	