Fittings

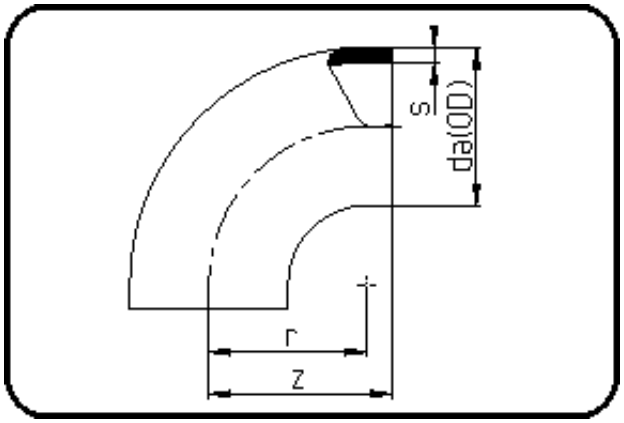

Code: 001

- **Bend 90°**
- short spigot
- injection moulded
- **Butt-welding**
- **AGRU-Vent PVDF**

Dimension	Code	Detail	Weight
200	34.001.0200.00	200X3,0	1.47

	Unit	Nominale	Tol+	Tol-
da(OD)	mm	200.00	-	-
r	mm	196.00	-	-
s	mm	3.00	0.60	0.00
z	mm	217.00	3.00	3.00