Elongated Fittings

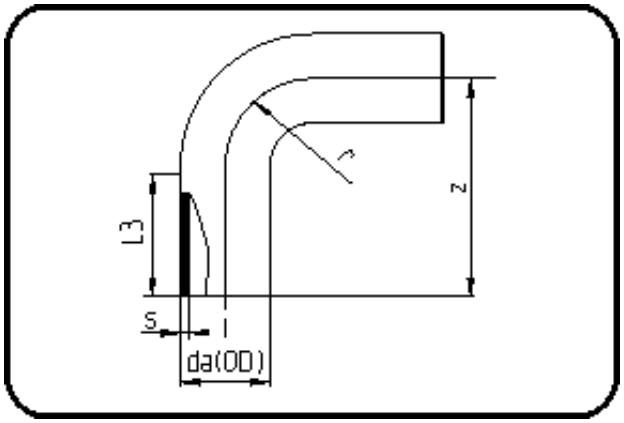

Code: 068

- **MULTI-Bend 90°**
- long spigot
- W/P-TW
- injection moulded
- **Butt + E-fusion-welding**
- **PE 100-RC black**

Dimension	Code	Detail	Weight
160	70.068.0160.17	160X9,5 SDR17 PN10	2.28

	Unit	Nominale	Tol+	Tol-
da(OD)	mm	160.00	1.00	0.00
L3	mm	101.00	4.50	3.75
r	mm	160.00	-	-
s	mm	9.50	1.10	0.00
z	mm	260.00	6.00	6.00