Elongated Fittings

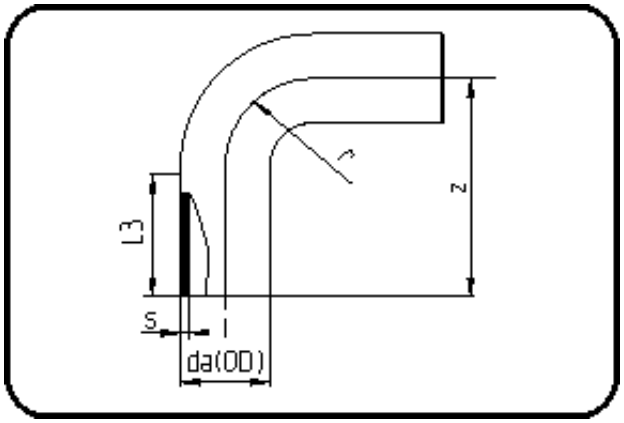

Code: 068

- **MULTI-Bend 90°**
- long spigot
- W/P-TW
- injection moulded
- **Butt + E-fusion-welding**
- **PE 100-RC black**

Dimension	Code	Detail	Weight
40	70.068.0040.11	40X3,7 SDR11 PN16	0.08

	Unit	Nominale	Tol+	Tol-
da(OD)	mm	40.00	0.40	0.00
L3	mm	52.00	3.00	3.00
r	mm	40.00	-	-
s	mm	3.70	0.50	0.00
z	mm	92.50	4.50	4.50