Elongated Fittings

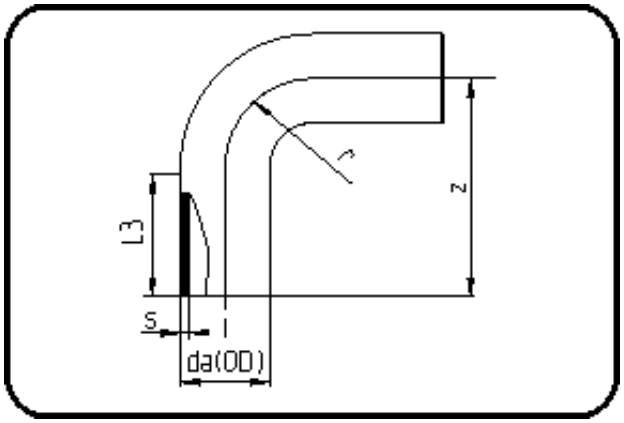

Code: 068

- **MULTI-Bend 90°**
- long spigot
- W/P-TW
- injection moulded
- **Butt + E-fusion-welding**
- **PE 100-RC black**

Dimension	Code	Detail	Weight
63	70.068.0063.17	63X3,8 SDR17 PN10	0.19

	Unit	Nominale	Tol+	Tol-
da(OD)	mm	63.00	0.40	0.00
L3	mm	66.50	3.00	3.00
r	mm	63.00	-	-
s	mm	3.80	0.50	0.00
z	mm	129.50	4.50	4.50