Fittings

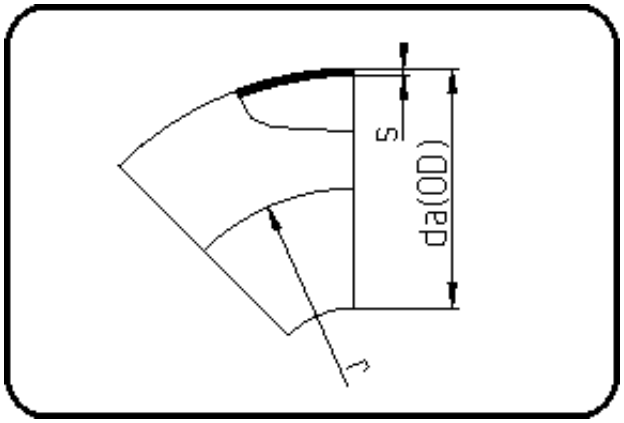

Code: 001.2

- **Bend 45°**

- injection moulded
- **Butt-welding**
- **AGRU-Vent PVDF**

Dimension	Code	Detail	Weight
315	34.001.2315.33	315X9,7	4.80

	Unit	Nominale	Tol+	Tol-
da(OD)	mm	315.00	-	-
r	mm	300.00	-	-
s	mm	9.70	1.20	0.00