# Elongated Fittings

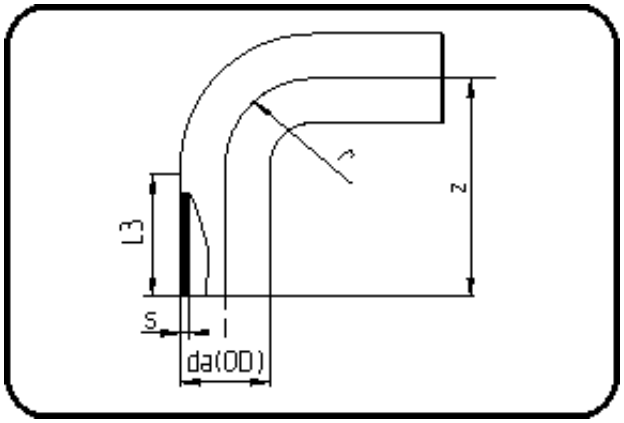


Code: 068

- **MULTI-Bend 90°**
- long spigot
- W/P-TW
- injection moulded
- **Butt + E-fusion-welding**
- **PE 100-RC black**

| Dimension | Code | Detail | Weight |
|---|---|---|---|
| 200 | 70.068.0200.17 | 200X11,9 SDR17 PN10 | 4.18 |

| | Unit | Nominale | Tol+ | Tol- |
|---|---|---|---|---|
| da(OD) | mm | 200.00 | 1.20 | 0.00 |
| L3 | mm | 118.50 | 6.00 | 6.00 |
| r | mm | 200.00 | - | - |
| s | mm | 11.90 | 1.30 | 0.00 |
| z | mm | 318.50 | 7.50 | 7.50 |