INDISSIMA

Design: Matteo Thun & Antonio Rodriguez



A88510

INDISSIMA Basket A88510CR

INDA ACCESSORIES INDISSIMA Basket Cm21.7X10 H3 CR

To Activate the interactive 3D view, you must trust this document (see hint on the top) in Adobe Acrobat and click on the question mark.

3D VIEW

Moves you toward or away from objects inthe scene when you drag vertically. You canalso zoom with the hand tool by holding downShift as you drag.

Moves the model vertically and horizontallyonly. You can also pan with the hand tool:Ctrl-drag.

Turns 3D objects around relative to thescreen. How the objects move depends onthe starting view, where you start draggingand the direction in which you drag.

info@inda.net
www.inda.net
+39 0363 38061

INDA SpA
Registered Office
Operational Headquaters
Via dell'Industria, 41
I-24040 Pagazzano (BG)

2D DERIVATION

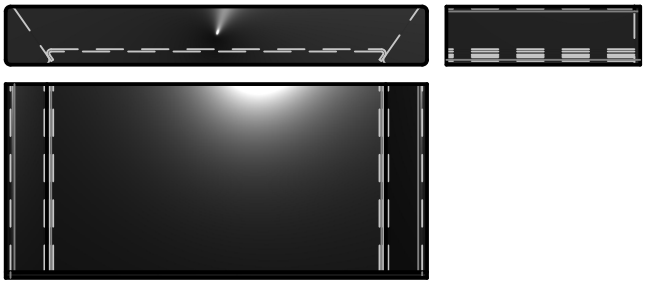

TECHNICAL DRAWINGS

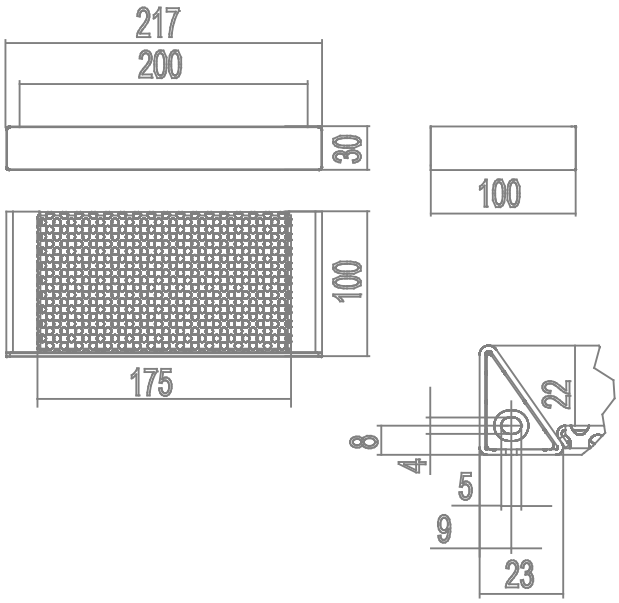

AVAILABLE FINISHES

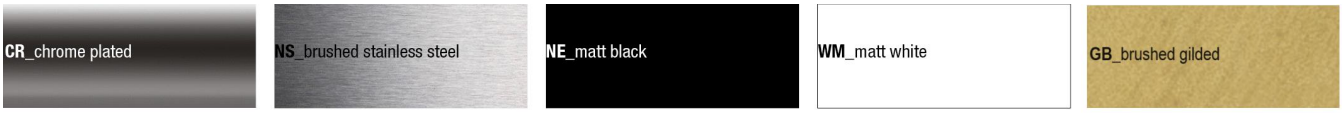

Code	A88510CR
Material	Chrome-plated
Article description	INDA ACCESSORIES INDISSIMA Basket Cm21.7X10 H3 CR
International code	EAN-13:8033163682556
Height [cm]	3
Width [cm]	21.7
Depth [cm]	10
Weight [kg]	0.465
Series	INDISSIMA
LINE	Basket
Model	A88510
Intrastat code	73249000
URL link web site of the article	https://www.inda.net/
Design	Matteo Thun & Antonio Rodriguez

info@inda.net
www.inda.net
+39 0363 38061

INDA SpA
Registered Office
Operational Headquaters
Via dell'Industria, 41
I-24040 Pagazzano (BG)