Fittings with short Spigot

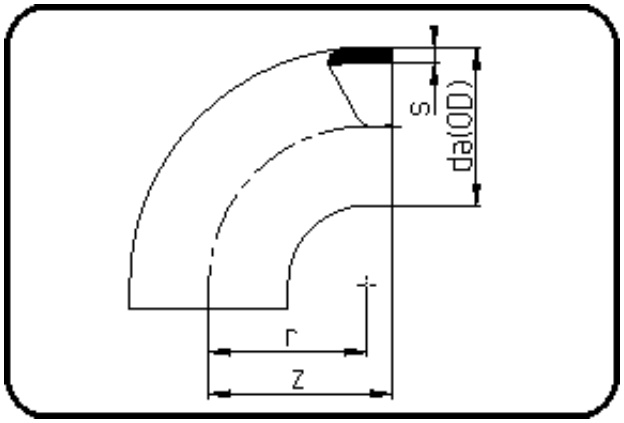

Code: 001

- **Bend 90°**
- short spigot
- injection moulded
- **Butt-welding**
- **PE 100-RC black**

Dimension	Code	Detail	Weight
110	70.001.0110.11	110X10,0 SDR11 ISO S-5	0.63

	Unit	Nominale	Tol+	Tol-
da(OD)	mm	110.00	1.00	0.00
r	mm	110.00	-	-
s	mm	10.00	1.10	0.00
z	mm	124.00	4.50	4.50