Elongated Fittings

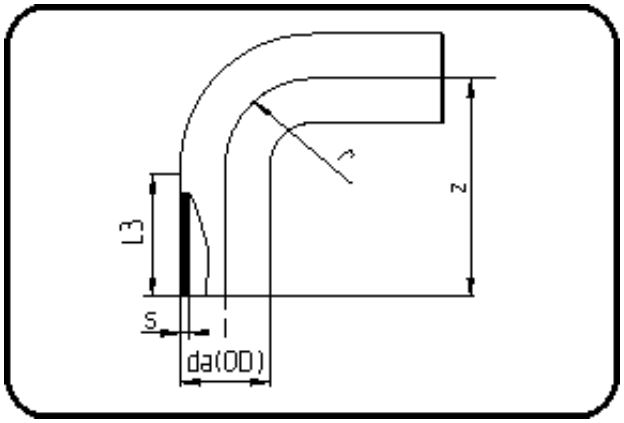

Code: 068

- **MULTI-Bend 90°**
- long spigot
- W/P-TW
- injection moulded
- **Butt + E-fusion-welding**
- **PE 100-RC black**

Dimension	Code	Detail	Weight
280	70.068.0280.17	280X16,6 SDR17 PN10	10.13

	Unit	Nominale	Tol+	Tol-
da(OD)	mm	280.00	1.70	0.00
L3	mm	143.00	6.00	6.00
r	mm	280.00	-	-
s	mm	16.60	1.80	0.00
z	mm	429.00	7.50	7.50