CHARLIE

CH75500CR

NOBILI



SPECIFICATIONS

Single control
Chrome
360° swivel spout
Adjustable 2-jet hand shower
ø 3/8" stainless steel flexible pipe
50% two step cartridge for water saving
Packaging: 56,5 x 29 x 7,1 cm / 0,01163 m^3 / 3,64 kg

CERTIFICATIONS

BELGAQUA ACS

carlo nobili spa rubinetterie - via novara 29, suno (no) italia - office +39 0322 885885 - fax +39 0332 858091 - mail info@nobili.it - web nobili.it

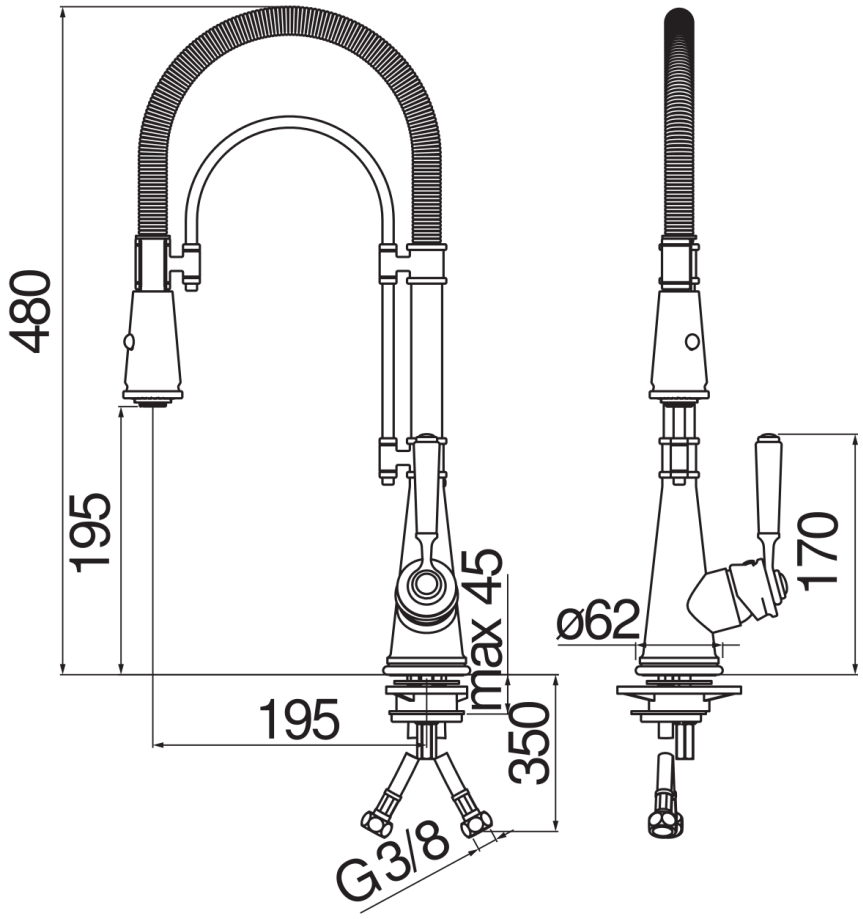
480
195
195
max 45
350
G3/8
ø62
170

FLOW RATE DIAGRAM: HOT/COLD WATER

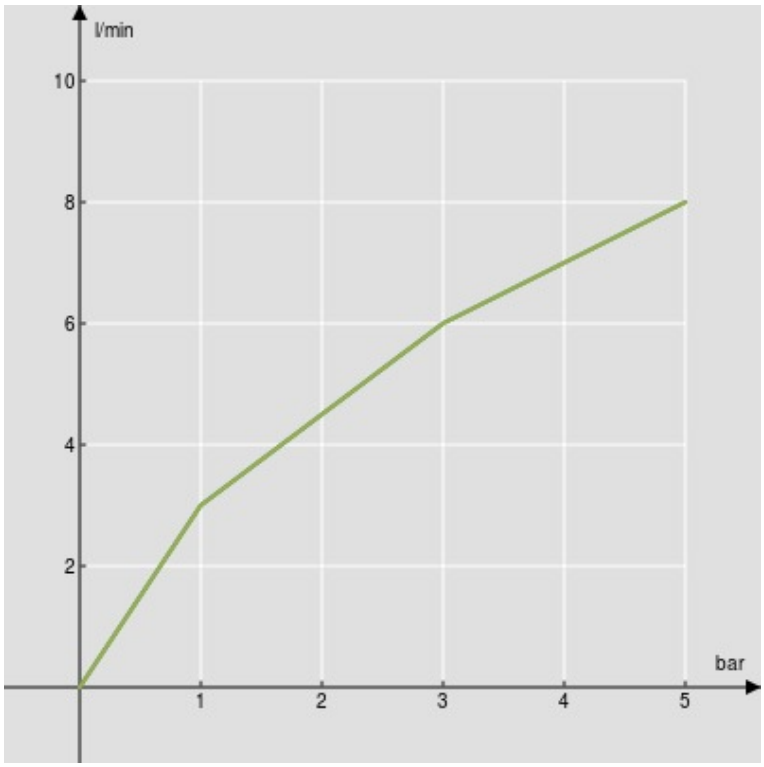

Normal jet
Rain jet

FLOW RATE DIAGRAM: MIXED WATER

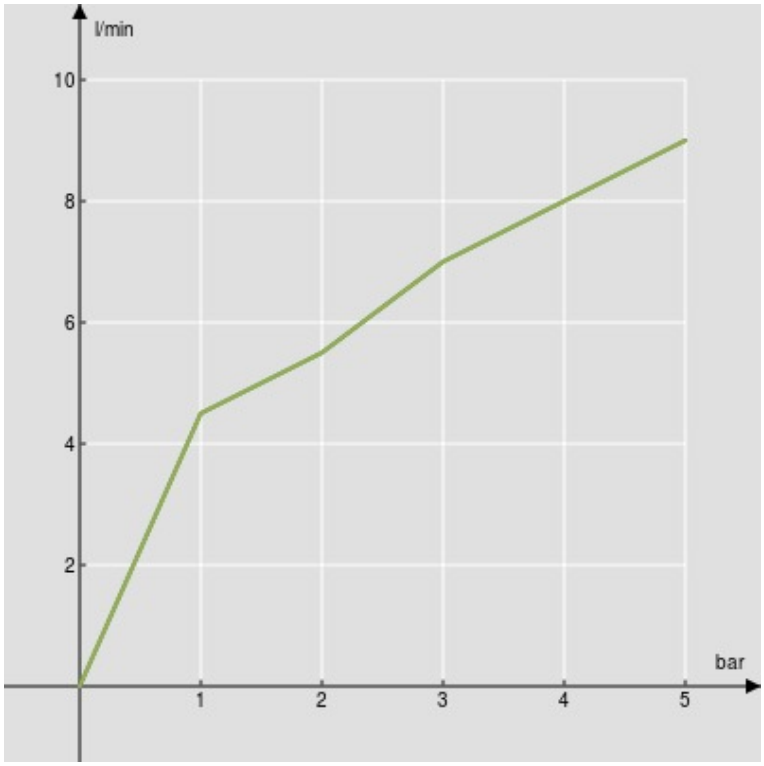

Normal jet
Rain jet